To: _____ From: _____
Company: _____ Return to: _____
Note: _____

# Belting & Chain Drive Data Submittal Form

Inquiry # _____ Customer: _____
Senders Name: _____ Project: _____
Application: _____ (crusher, chipper, conveyor, spindle, etc.)
Motor H.P. _____ RPM _____ Reference Model # _____

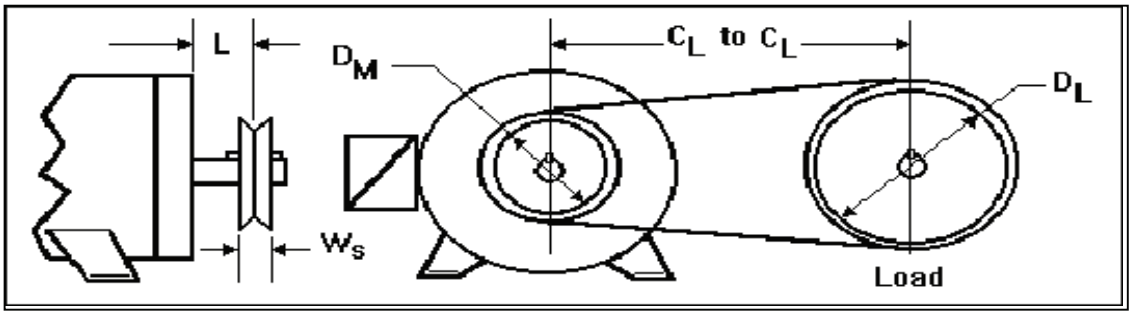


Dm (pitch diameter of motor sheave/sprocket) = _____ inches or _____ mm
DL (pitch diameter of driven sheave/sprocket at load side) _____ inches or _____ mm
L (motor face to center of sheave/sprocket) = _____ inches or _____ mm
NOTE: Minimize L to reduce shaft stress and increase bearing life

Ws (width of motor sheave/sprocket) = _____ inches or _____ mm
Weight of motor sheave (or sheave & bushing _____ lbs
CL to CL (center of motor sheave/sprocket to center of load sheave/sprocket _____ inches or _____ mm

Required bearing life _____ hours

**Number of belts/chains** on motor sheave/sprocket _____
**Belt/chain length & type** _____ Mfr: _____
**Motor is mounted** _____ horizontal _____
_____ vertical shaft up
_____ vertical shaft down

Direction of pull for horizontal motors (see figure to right):

| | |
|---|---|
| | A |
| | B |
| | C |
| | D |
| | E |

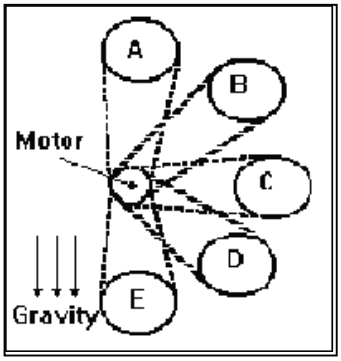


For chain & synchronous belt applications only
Number of teeth on motor sprocket _____
Number of teeth on load sprocket _____

Other Data: _____